BI8U-EM18WDTC-AP6X
Inductive Sensor – For the Food Industry

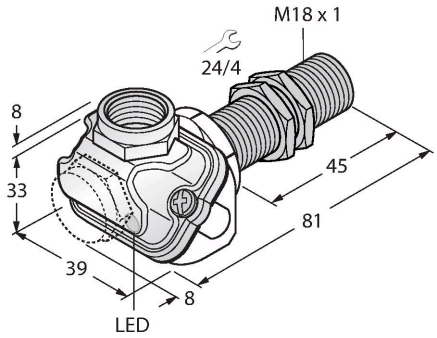

Features

- Threaded barrel, M18 x 1
- Stainless steel, 1.4404
- Front cap made of liquid crystal polymer
- Factor 1 for all metals
- Resistant to magnetic fields
- For temperatures of -40 °C…+100 °C
- High protection class IP69K for harsh environments
- Special double-lip seal
- Protection against all common acidic and alkaline cleaning agents
- Suitable for applications in the food industry
- DC 3-wire, 10…30 VDC
- NO contact, PNP output
- Terminal chamber

Technical data

Type	BI8U-EM18WDTC-AP6X
ID	1634762
General data	
Rated switching distance	8 mm
Mounting conditions	Flush
Secured operating distance	≤ (0.81 × Sn) mm
Repeat accuracy	≤ 2 % of full scale
Temperature drift	≤ ±10 %
	≤ ± 20 %, ≤ -25 °C , ≥ +70 °C
Hysteresis	3…15 %
Electrical data	
Operating voltage U_B	10…30 VDC
Ripple U_{ss}	≤ 10 % U_{Bmax}
DC rated operating current I_e	≤ 200 mA
No-load current	≤ 25 mA
Residual current	≤ 0.1 mA
Isolation test voltage	0.5 kV
Short-circuit protection	yes/Cyclic
Voltage drop at I_e	≤ 1.8 V
Wire break/reverse polarity protection	yes/Complete
Output function	3-wire, NO contact, PNP
DC field stability	300 mT
AC field stability	300 mT_{ss}
Insulation class	⧈
Switching frequency	1.5 kHz
Mechanical data	
Design	Threaded barrel, M18 x 1

Wiring diagram

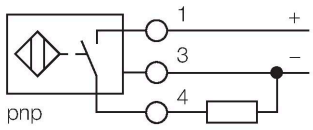

Functional principle

The inductive sensors for the food industry are absolutely tight and resistant to cleaning agents and disinfectants. The requirements of the protection classes IP68 and IP69K are well exceeded by our uprox®+ sensors. The sensors are entirely protected by the LCP front cap and the stainless steel housing.

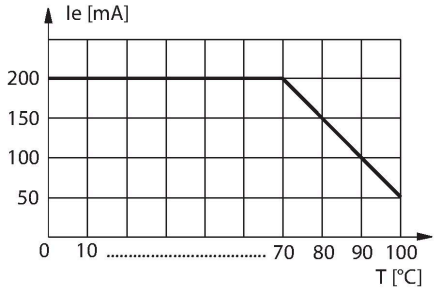

BI8U-EM18WDTC-AP6X| 25-07-2024 17-08 | Technical modifications reserved

Technical data

Dimensions	81 mm
Housing material	Stainless steel, 1.4404 (AISI 316L)
Terminal chamber cover material	plastic, Ultem
Terminal chamber housing material	plastic, LCP-GF30
Active area material	Plastic, LCP
Admissible pressure on front cap	≤ 15 bar
Max. tightening torque of housing nut	25 Nm
Electrical connection	Terminal chamber, Removable cage clamp terminals
	suited for M16 x 1.5 cable glands
Clamping ability	≤ 1.5 mm²
Environmental conditions	
Ambient temperature	-40…+100 °C
Vibration resistance	55 Hz (1 mm)
Shock resistance	30 g (11 ms)
Protection class	IP68 IP69K
MTTF	874 years acc. to SN 29500 (Ed. 99) 40 °C
Switching state	LED, Yellow

BI8U-EM18WDTC-AP6X| 25-07-2024 17-08 | Technical modifications reserved

Mounting instructions

Mounting instructions/Description

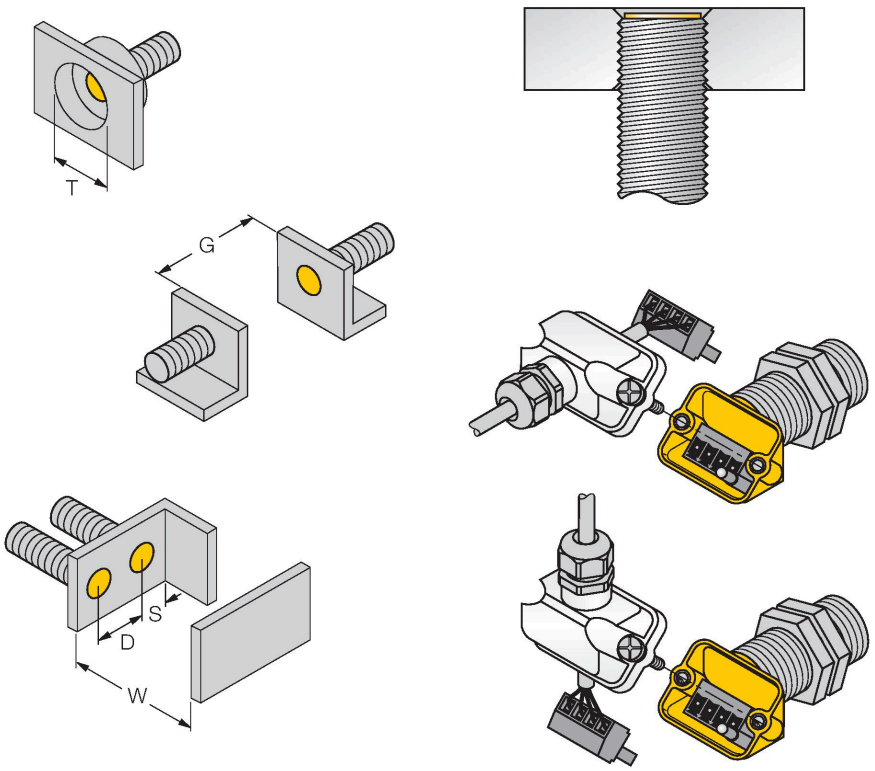

Distance D	36 mm
Distance W	3 x Sn
Distance T	3 x B
Distance S	1.5 x B
Distance G	6 x Sn
Diameter active area B	Ø 18 mm

All flush mountable uprox®+ threaded barrel types are also recessed mountable. Safe operation is ensured if the sensor is screwed in by half a turn.

The innovative terminal chamber concept enables easy and simple connection of the sensor. Straight as well as angled cable outlets are available and the removable terminal strip guarantees easy wiring.

Accessories

MW18	6945004

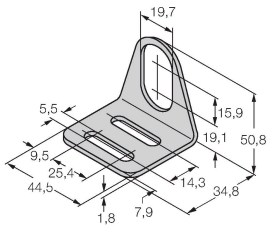

Mounting bracket for threaded barrel sensors; material: Stainless steel A2 1.4301 (AISI 304)

BSS-18	6901320

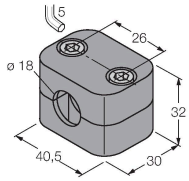

Mounting clamp for smooth and threaded barrel sensors; material: Polypropylene

QM-18	6945102

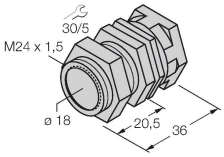

Quick-mount bracket with dead-stop; material: Chrome-plated brass. Male thread M24 × 1.5. Note: The switching distance of the proximity switches may change when using quick-mount brackets.

PN-M18	6905310

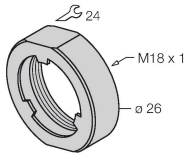

Protective nut for M18 x 1 threaded barrels; material: Stainless steel A2 1.4305 (AISI 303)

BI8U-EM18WDTC-AP6X| 25-07-2024 17-08 | Technical modifications reserved

Accessories

Dimension drawing	Type	ID	
	M16X1.5 PVDF CABLE GLAND	1634759	M16 × 1.5 cable gland, material: PVDF; with Viton O-ring; IP69K

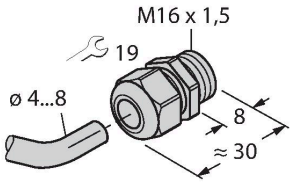

BI8U-EM18WDTC-AP6X| 25-07-2024 17-08 | Technical modifications reserved