Compact IP20 Multiprotocol I/O Station
4 IO-Link Master Channels
FEN20-4IOL

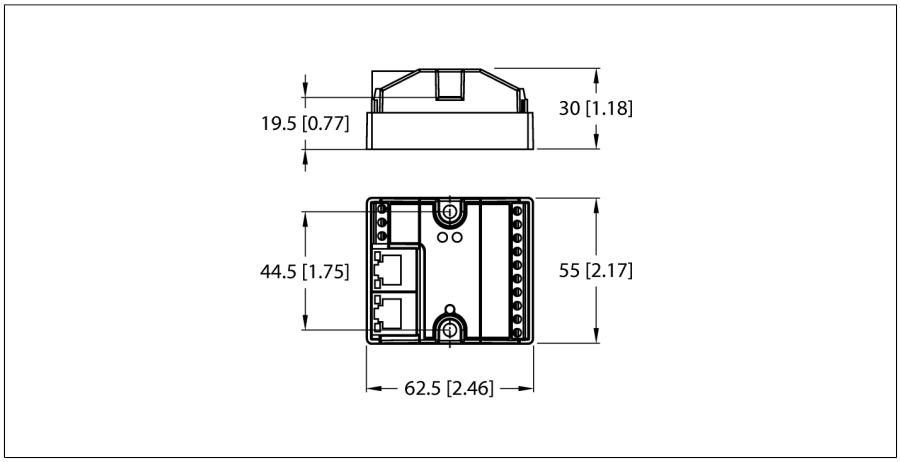

- 5-pin M12 slots for IO-Link master
- IO-Link master port class A and port class B
- IO-Link protocol 1.1

Type	FEN20-4IOL
ID	6814140

Supply	
Supply voltage	24 VDC
Admissible range	20.4…28.8
System power supply	Supply from V1, class 2 power source required
Voltage supply connection	Screw terminals
Operating current	100 mA
Sensor/actuator supply	Supply of terminals V1+1…V1+4 from V1+, 1 A per terminal. Total current max. 4 A
Electrical isolation	500V Galvanic Zone-Zone and Zone-Ethernet
Power dissipation, typical	≤ 2.4 W

System data	
Transmission rate Ethernet	10/100 Mbps, full/half duplex, autonegotiation, autocrossing
Fieldbus connection technology	Screw terminals, (Power and I/O)
Terminal cross-section	0.2…1.5 mm² (AWG: 26…14)
Tightening torque	0.5 Nm
Connection technology Ethernet	2 × RJ45
Fieldbus address range	0 (192.168.1.254)
Protocol detection	automatic
Web server	192.168.1.254 (Default)
Service interface	Ethernet

Field Logic Controller (FLC)	
ARGEE Firmware Version	1.2.0.0
ARGEE Engineering Version	1.0.10.0

Modbus TCP	
Addressing	Static IP, BOOTP, DHCP
Supported function codes	FC1, FC2, FC3, FC4, FC5, FC6, FC15, FC16, FC23
Number of TCP connections	6
Input Data Size	max. 1 register
Input register start address	0 (0x0000 hex)
Output Data Size	max. 1 register
Output register start address	2048 (0x0800 hex)

Edition • 2024-10-02T19:48:00+02:00

Ethernet/IP	
Addressing	acc. to EtherNet/IP specification
Quick Connect (QC)	< 400 ms
Device Level Ring (DLR)	supported
Class 1 connections (CIP)	6
Input Assembly Instance	103
Output Assembly Instance	104
Configuration Assembly Instance	106

PROFINET	
Addressing	DCP
Conformance class	B (RT)
MinCycleTime	1 ms
Fast Start-Up (FSU)	< 150 ms
Diagnostics	acc. to PROFINET alarm handling
Topology detection	supported
Automatic addressing	supported
Media Redundancy Protocol (MRP)	supported

Number of channels	4 from C/Q
Input type	PNP
Input delay	2.5 ms

Digital outputs	
Number of channels	4 from C/Q
Output type	PNP
Output current per channel	400 mA max,
Short-circuit protection	yes

IO-Link	
Number of channels	4
IO-Link specification	V 1.1
IO-Link port type	Class A
Frame type	Supports all specified frame types
Supported devices	Max. 32 bytes in/32 bytes out per port
Transmission rate	4.8 kbps (COM 1) / 38.4 kbps (COM 2) / 230 kbps (COM 3)

Standard/Directive conformity	
Vibration test	Acc. to IEC 60068-2-6
Shock test	gemäß IEC 60068-2-27
Approvals and certificates	cULus, contamination level 2, class 2 power supply required

General Information	
Dimensions (W x L x H)	55 x 62.5 x 30 mm
Ambient temperature	-25…+70 °C
Storage temperature	-40…+85 °C
Protection class	IP20
MTTF	425 years acc. to SN 29500 (Ed. 99) 20 °C
Housing material	Glass fiber reinforced polyamide (PA6-GF30)
Housing color	Black
Tightening torque fixing screw	Screw terminals = 0.5 max. Nm

Edition • 2024-10-02T19:48:00+02:00

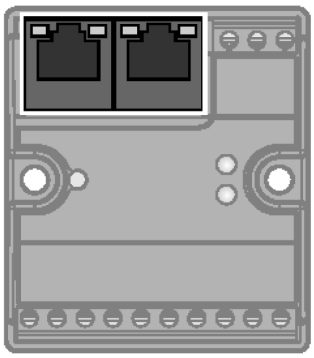	**Ethernet**	RJ45 Ethernet 1 = TX + 2 = TX – 3 = RX + 4 = n.c. 5 = n.c. 6 = RX – 7 = n.c. 8 = n.c.
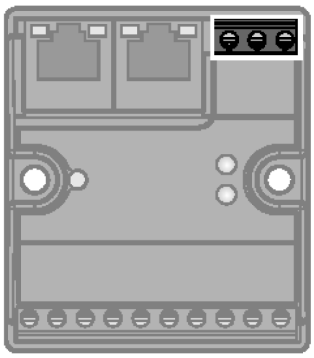	**Power Supply** Recommended torque for screw terminals: 0.5 Nm (4.43 lb.in)	Power Supply 1 = ⏚ 2 = V1 – 3 = V1 +
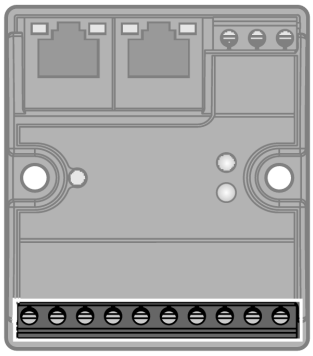	**I/O Channels** Recommended torque for screw terminals: 0.5 Nm (4.43 lb.in) V1+$_1$…V1+$_4$ configurable as on, switchable or off	Terminal Connection 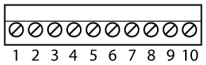 1 = V1 – 2 = C/Q 1 3 = V1+ 1 4 = C/Q 2 5 = V1+ 2 6 = C/Q 3 7 = V1+ 3 8 = C/Q 4 9 = V1+ 4 10 = V1-

Edition • 2024-10-02T19:48:00+02:00

Module Status LED

LED	Color	Status	Description
ETH1 / ETH2	Green	ON	Ethernet Link (100 Mbps)
		Flashing	Ethernet communication (100 Mbps)
	yellow	ON	Ethernet Link (10 Mbps)
		Flashing	Ethernet communication (10 Mbps)
		OFF	No Ethernet link
BUS	Green	ON	Active connection to a master
		Flashing	Ready
		Flashes 3x (1 Hz)	ARGEE program running
	Red	ON	IP address conflict or status word is active
		Flashing	Blink/Wink command active
		OFF	Power off
ERR	Green	ON	Diagnostics disabled
	Red	ON	Short circuit Wrong or missing device

Accessories

Type code	Ident no.		Dimension drawing
FDN20-BKT-DIN	Z0076	Mounting adapter for mounting of 8-channel Fxx20 modules on DIN rail (TS 35)	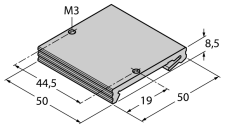

Edition • 2024-10-02T19:48:00+02:00